Future Radio Technology

IAF GmbH
Berliner Str. 52 J
38104 Braunschweig
www.iaf-bs.de

VLC-Interface Module Rev.3

Xilinx Zynq Ultrascale+ Module with Highspeed ADC and DAC

Main Features

- Xilinx SoC Zynq Ultrascale+ (FPGA + ARM processor cores)
- 2 channel Analog to digital converter with 12 bit resolution @ 1 GSPS
- 2 channel Digital to analog converter with 16 bit resolution @ 2,8 GSPS
- 8 GByte DDR RAM (PL), 2 GByte DDR RAM (PS)
- on board power supply to generate the required operating voltages
- on board clock generation with external / internal Ref. /Sync.
- 2 x 10G Ethernet (SFP)
- USB3, UART, 1G Ethernet interfaces
- 10G Ethernet interface
- FPGA boot via MicroSD card
- board size: 140 mm x 140 mm

Future Radio Technology

IAF GmbH
Berliner Str. 52 J
38104 Braunschweig
www.iaf-bs.de

VLC-Interface Module Rev.3

Hardware Architecture

The VLC-Interface Module serves as an interface for integrating Visible Light Communication (VLC) into the higher-level network architecture for 5G/6G and subsequent mobile radio standards.

Furthermore the VLC-Interface module is suitable for a wide range of applications, for example :

- software defined radio
- Wired and wireless communications
- Massive Mimo
- Multi antenna radar applications
- Quantum computing

The main hardware function blocks are shown in the diagram below:

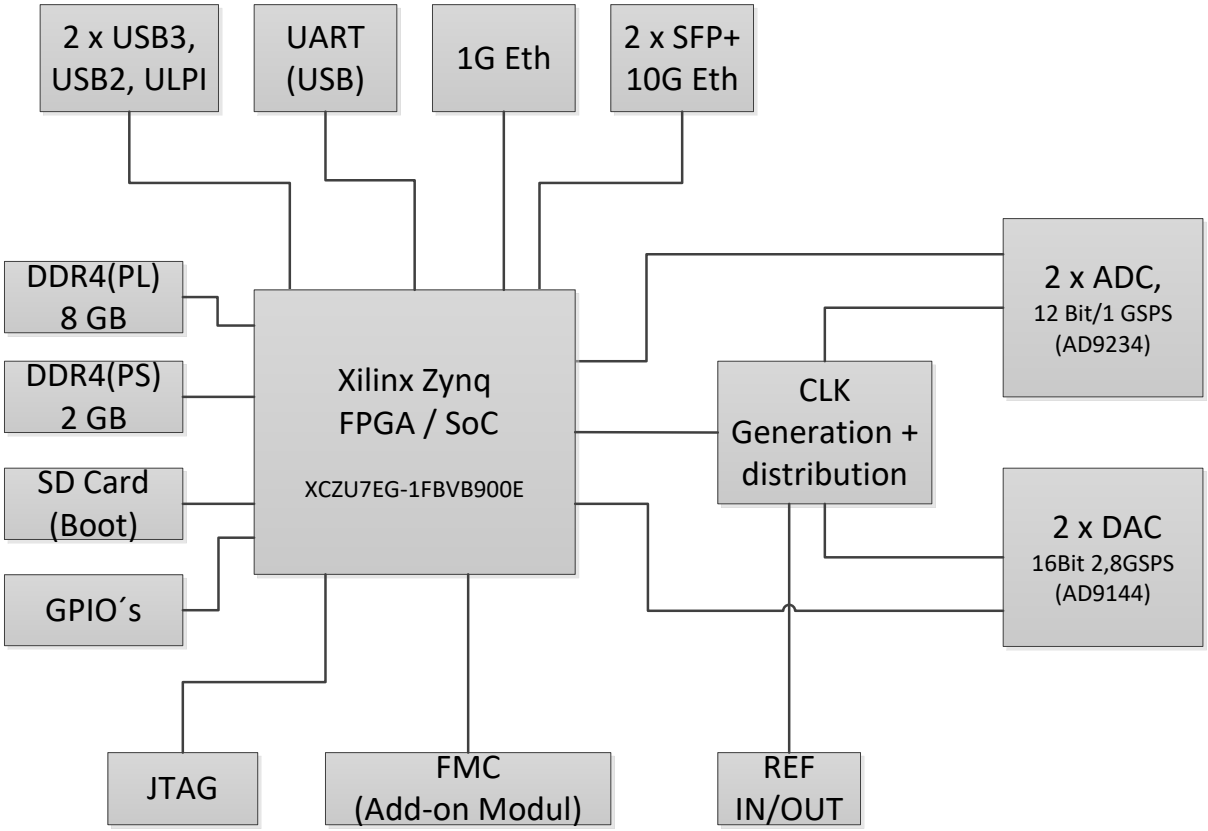

For further information please send an email to info@iaf-bs.de